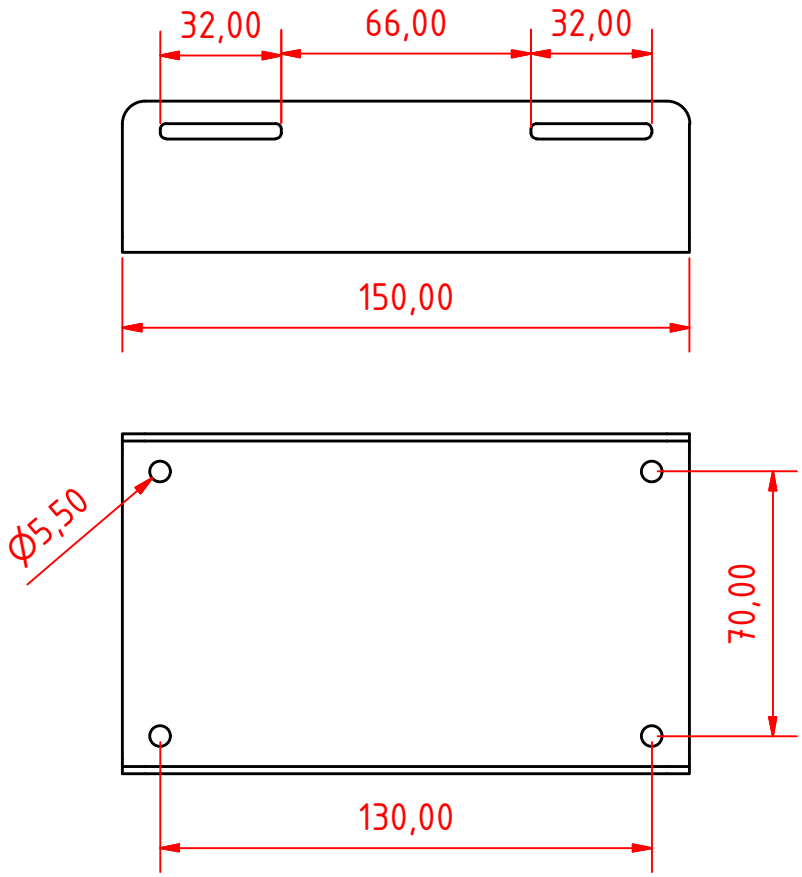

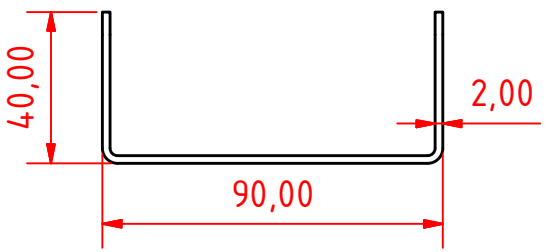

Material : AISI304

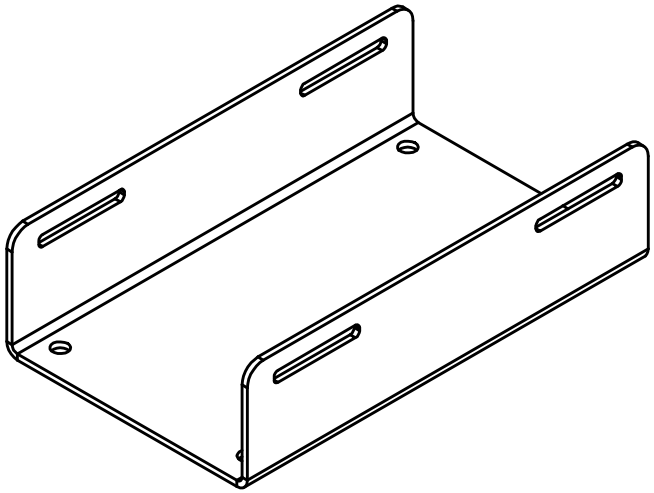

					Date	Name
				Drawn	30-Nov-22	Martins
				Checked		
				Standard		
State	Changes	Date	Name			

PS-014_PP1_PUB

1

A4