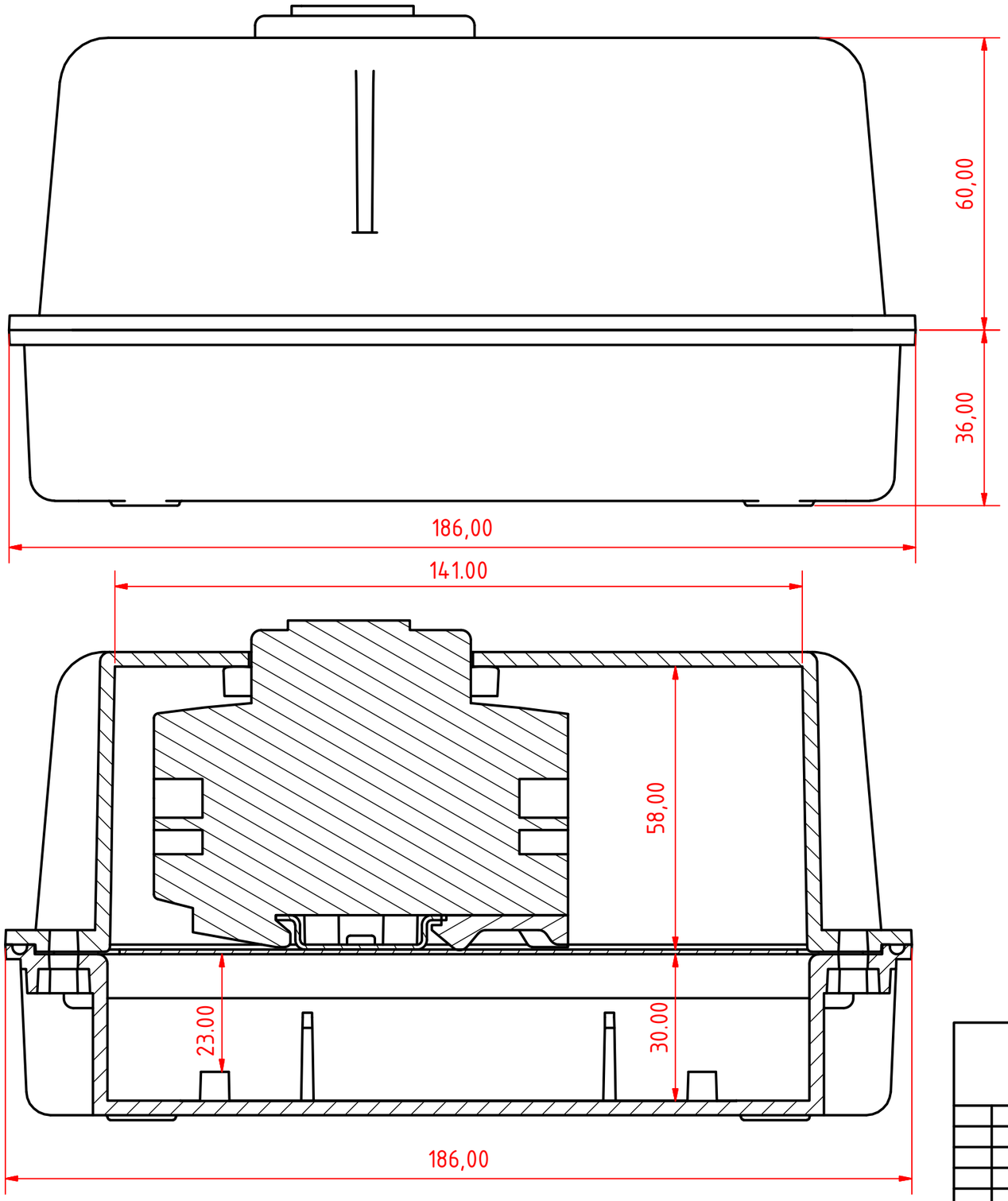

A-A (1 : 1)

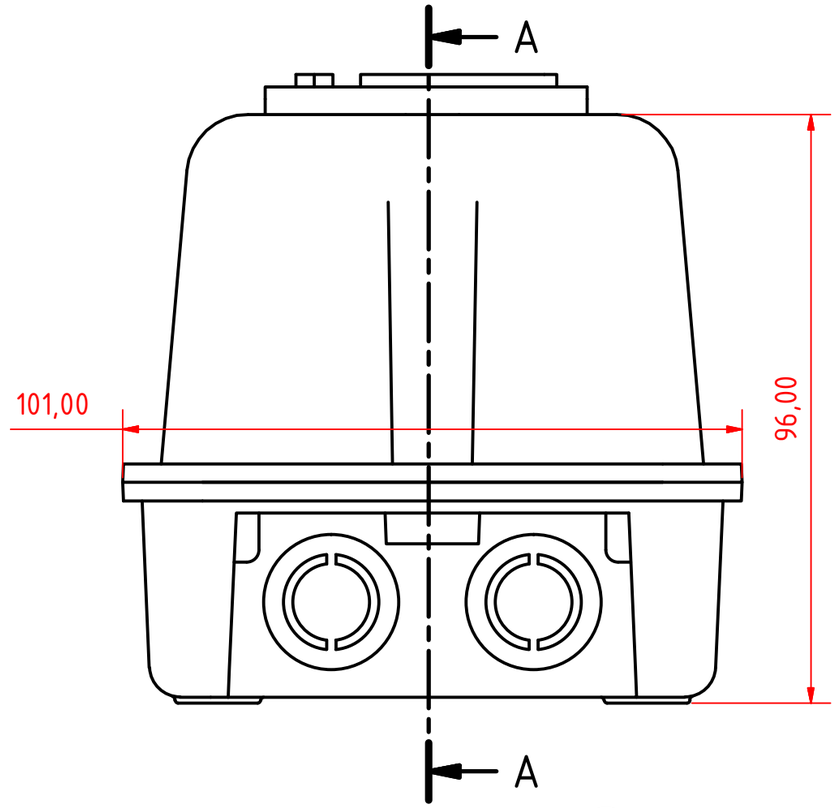

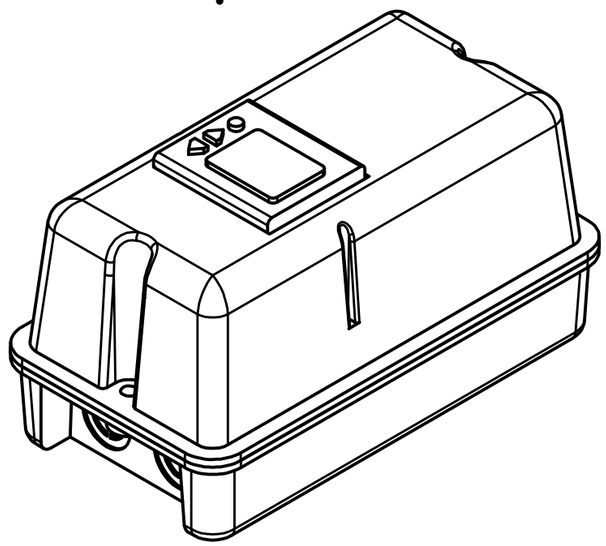

					Date	Name
				Drawn	30-Nov-22	Martins
				Checked		
				Standard		
State	Changes	Date	Name			

PS-014_ASM_BP3

1

A3