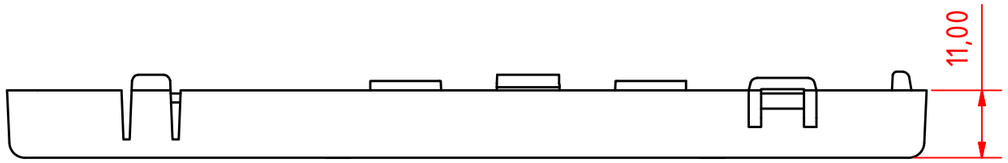

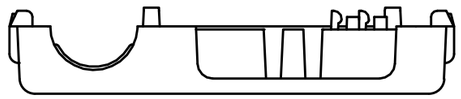

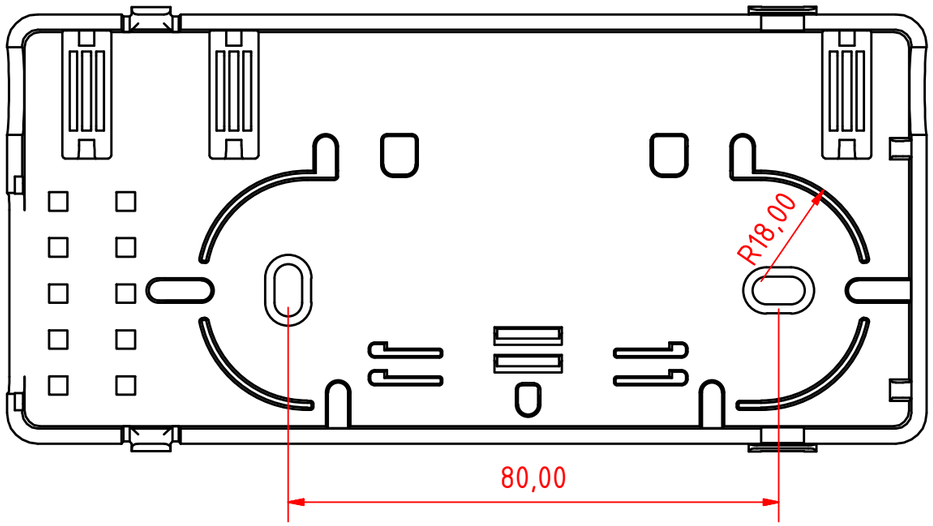

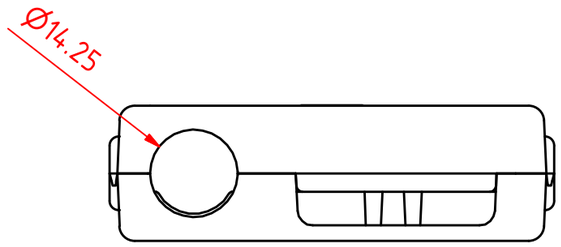

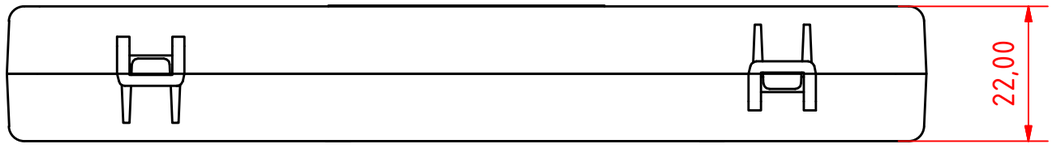

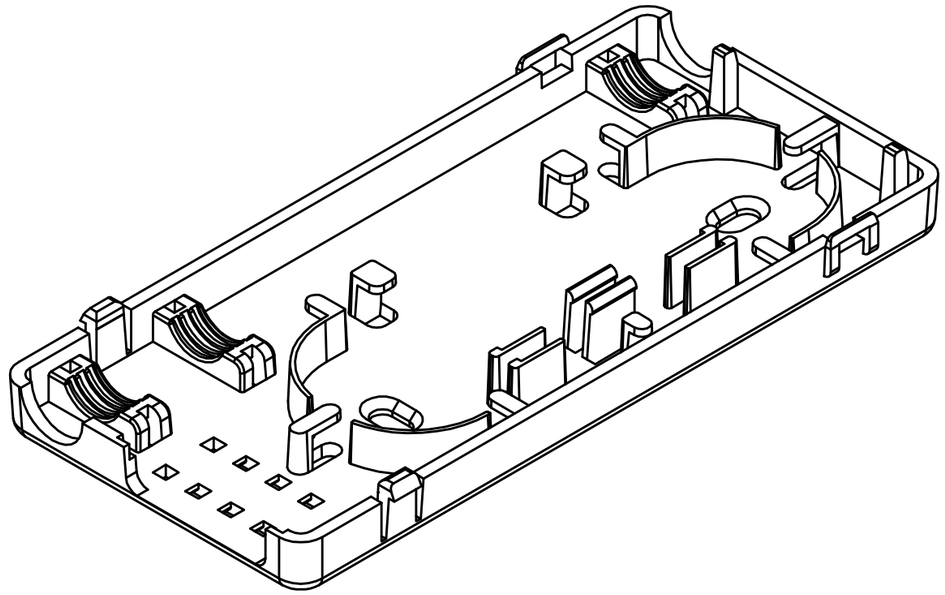

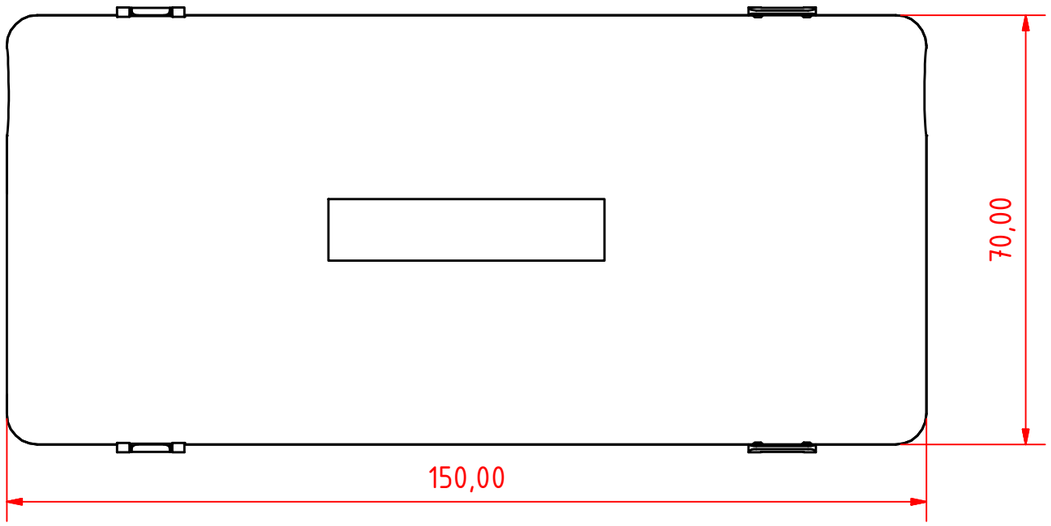

					Date	Name
				Drawn	25-May-20	Martins
				Checked		
				Standard		
State	Changes	Date	Name			

FOS-34_A11

1

A3