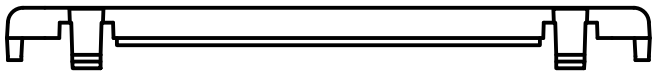

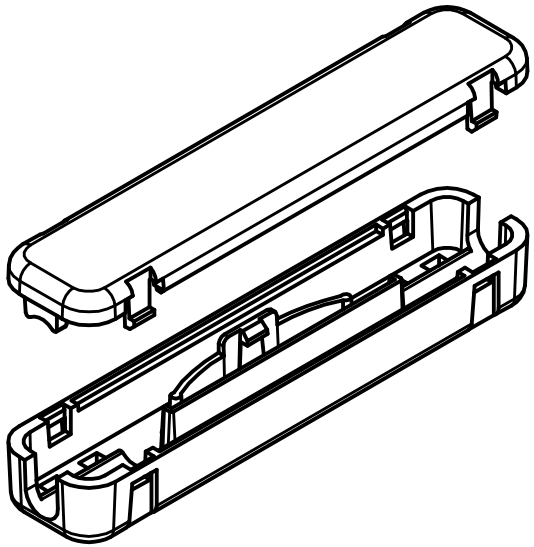

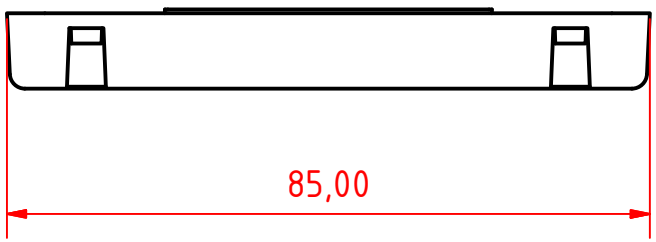

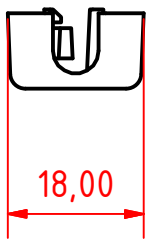

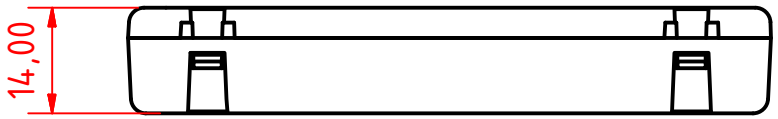

					Date	Name
				Drawn	05-Nov-20	Martins
				Checked		
				Standard		
State	Changes	Date	Name			

FOS-23-ASSEMBLY_C

1

A4