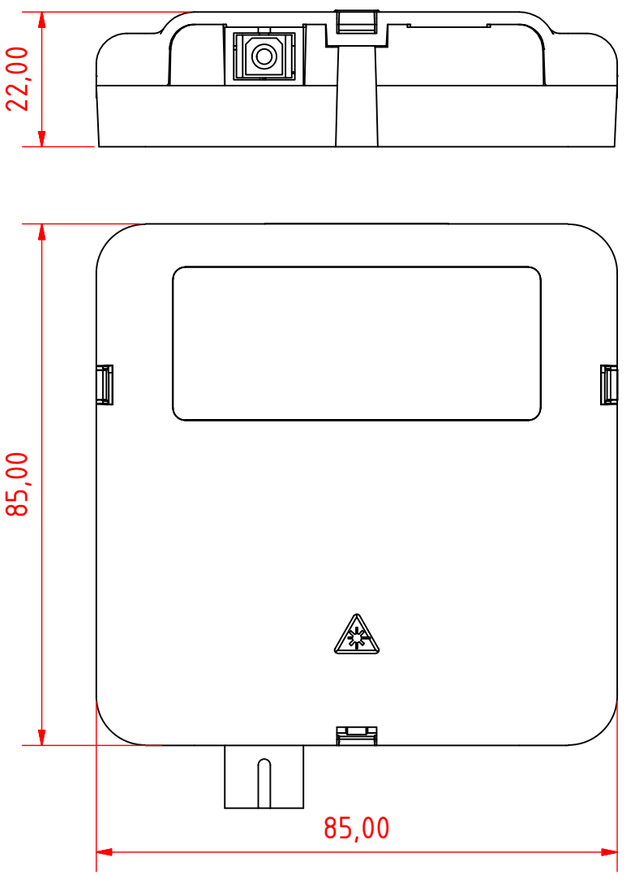

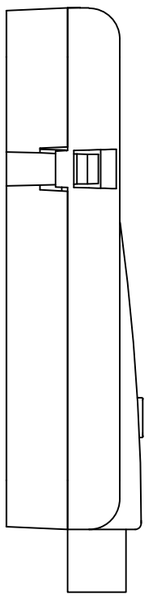

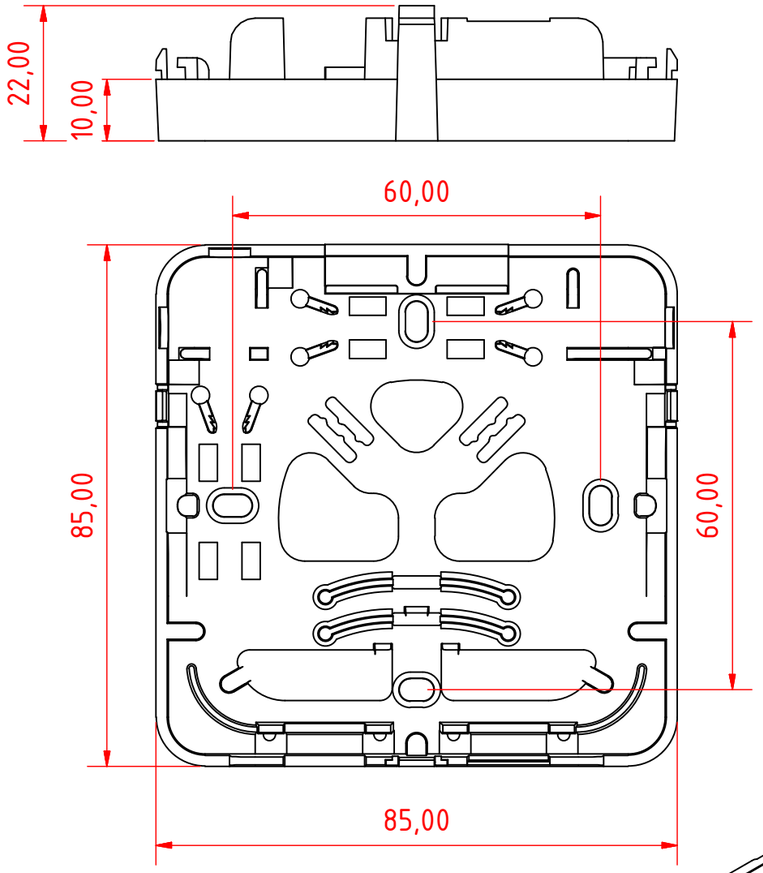

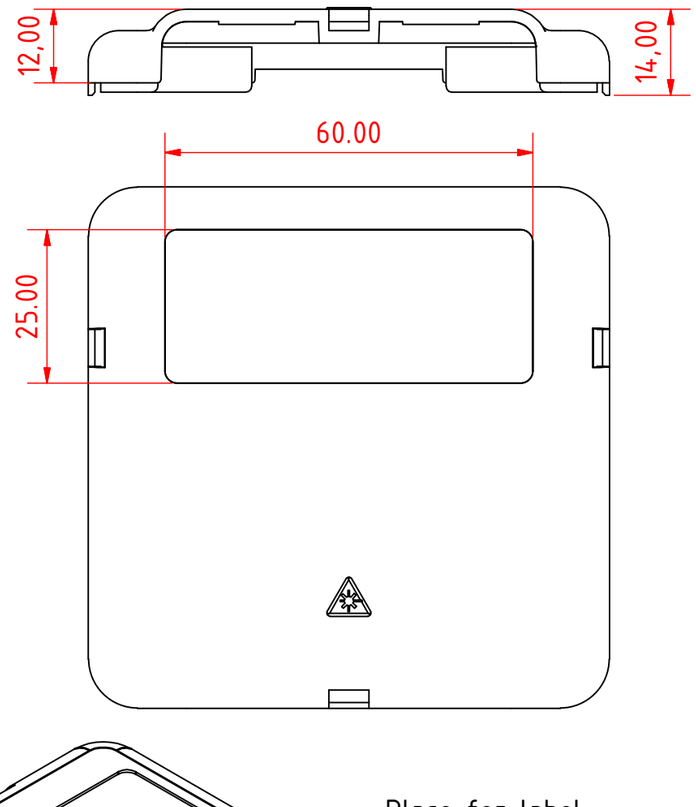

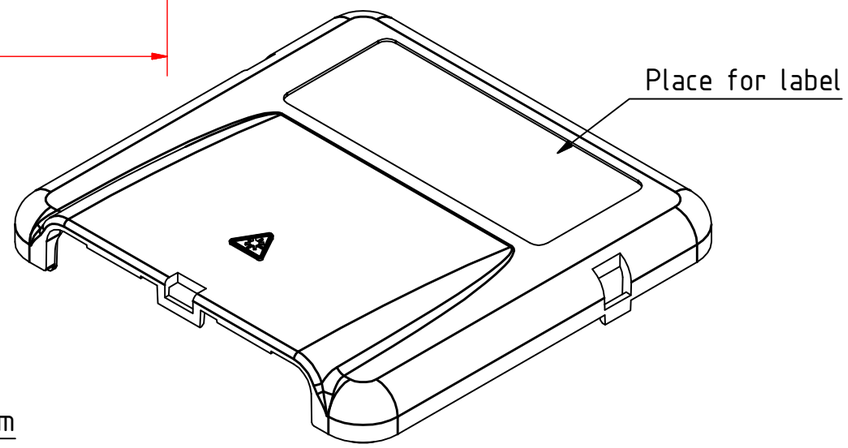

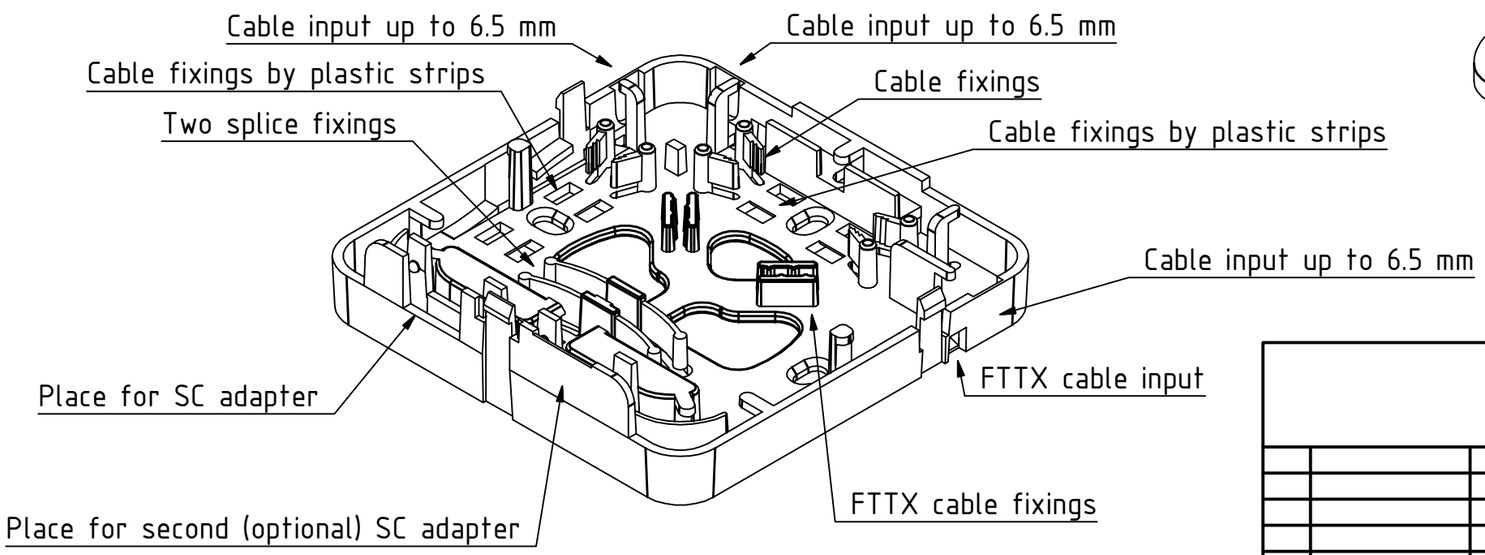

					Date	Name
				Drawn	2014.12.01.	Martins
				Checked		
				Standard		
State	Changes	Date	Name			

FOS-17_ASM1

1

A3