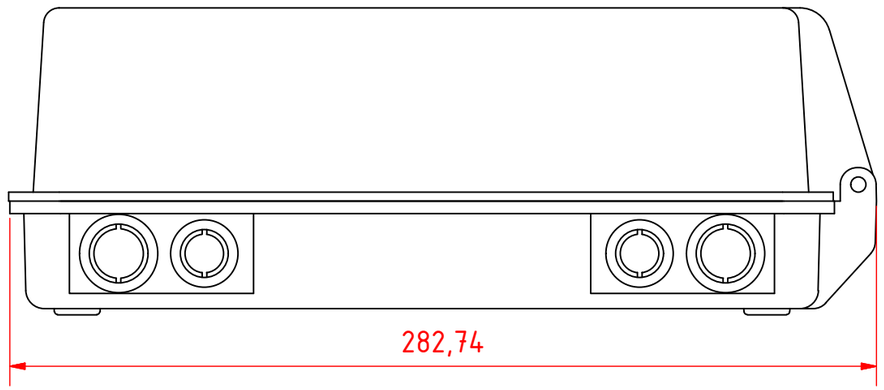

A (1 : 2)

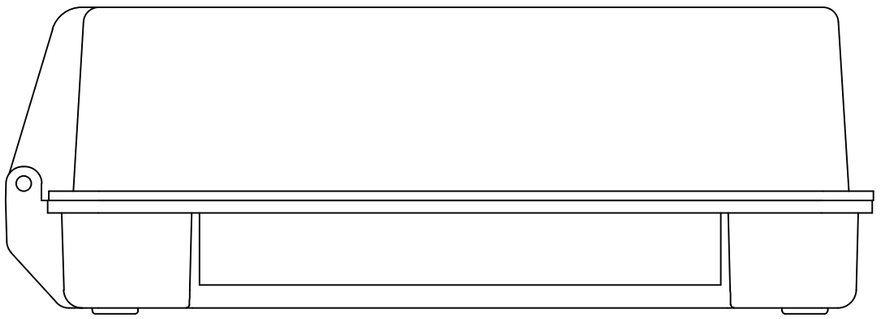

B-B (1 : 2)

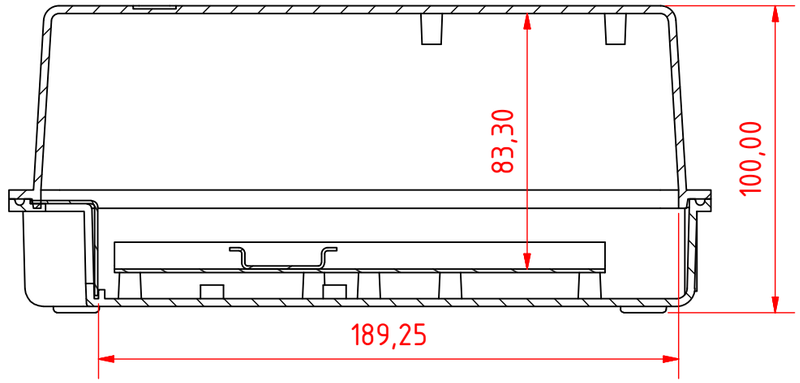

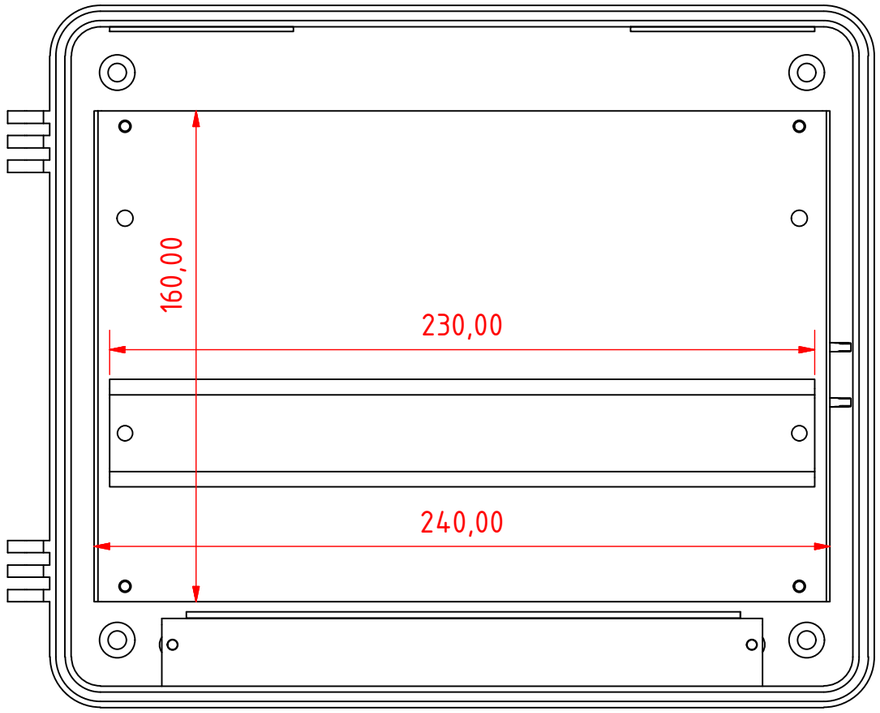

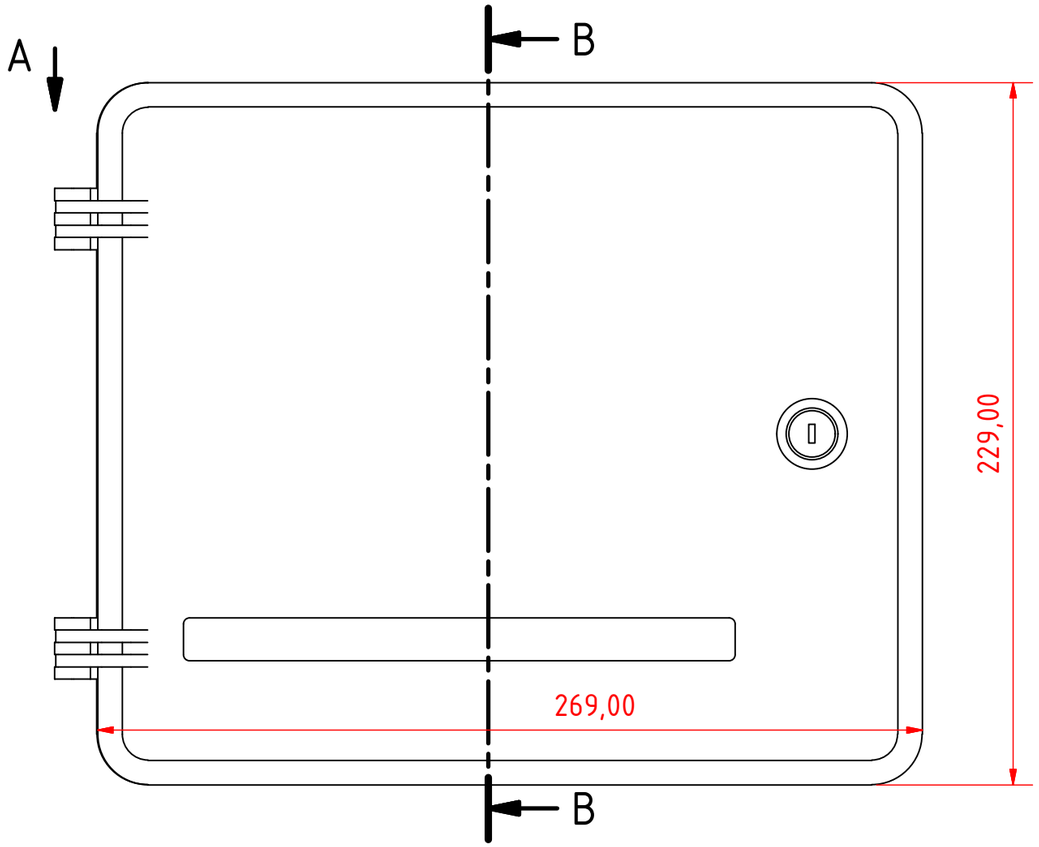

					Date	Name
				Drawn	2017.02.01.	Martins
				Checked		
				Standard		
State	Changes	Date	Name			

Assembly_FOS-54E

1

A3