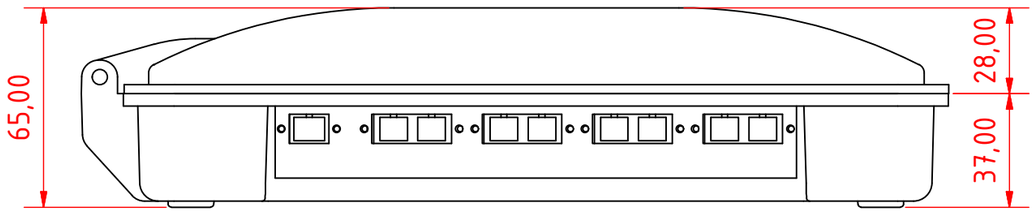

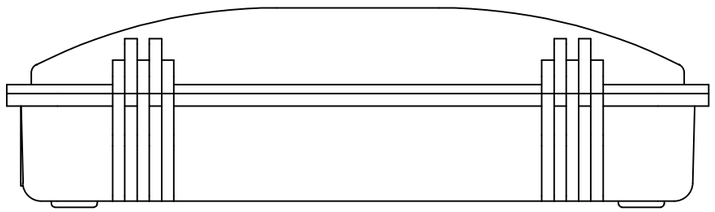

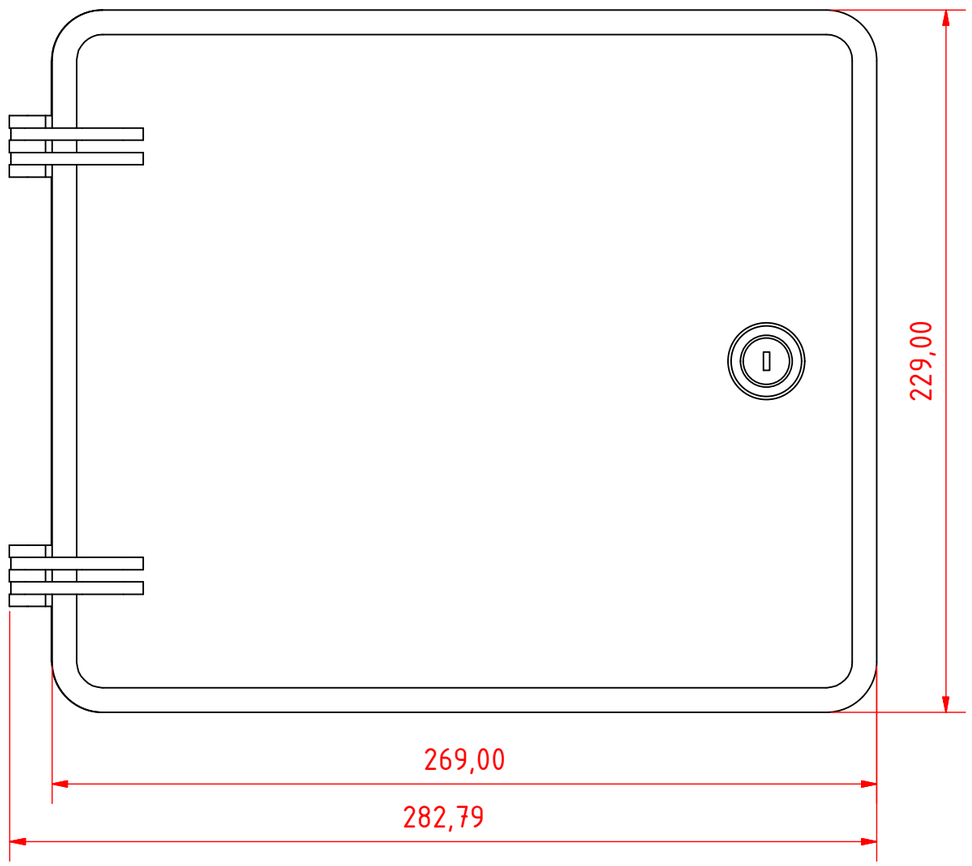

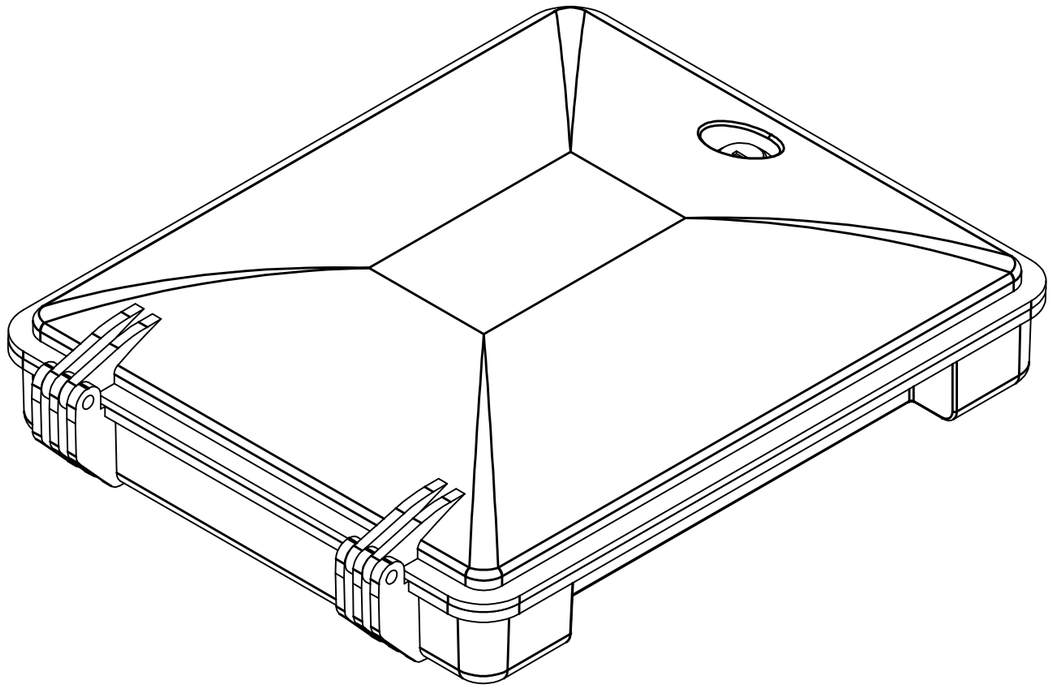

					Date	Name
				Drawn	2015.09.09.	Martins
				Checked		
				Standard		
State	Changes	Date	Name			

Assembly_FOS-54AA

1

A3